M~PLUS

M~PLUS MWS series

High Efficiency Water Separator

MWS series Compressed Air Filter

WATER SEPARATOR

MWS High Efficiency Water Separator

MWS High Efficient Water Separator is developed by CAD Computer Patent, its “decelerate” cohesion, accelerate “flow” breaches the features of the traditional MWS Water Separator, it is the only MWS High Efficient Water Separator which can keep higher than 99% efficiency of water separator.

PRODUCT FEATURES

- 99% efficiency
- Cost-saving
- Easy maintenance, element is unnecessary
- Patent product proved by practice
- High flow capacity
- Low pressure differences
- Equipped with the automatic drainage

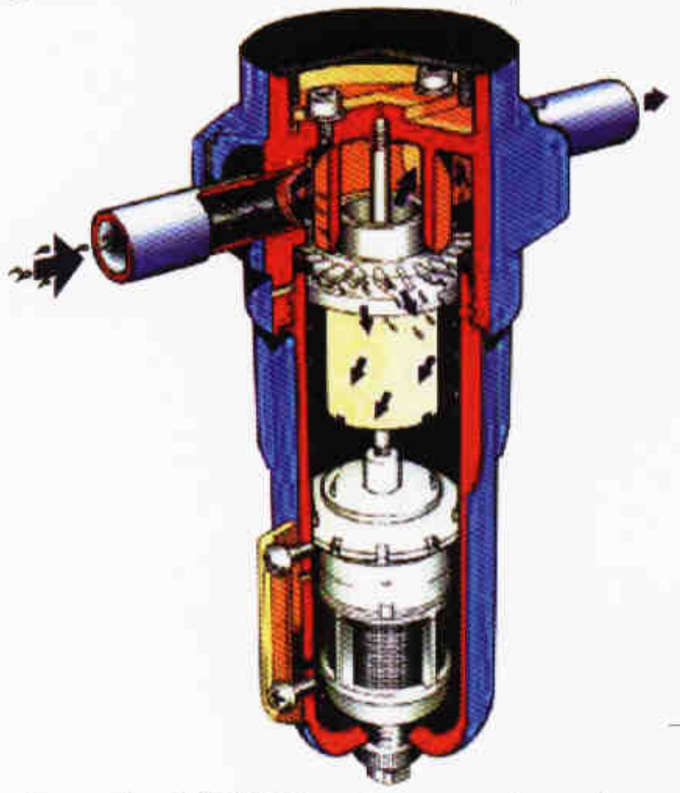

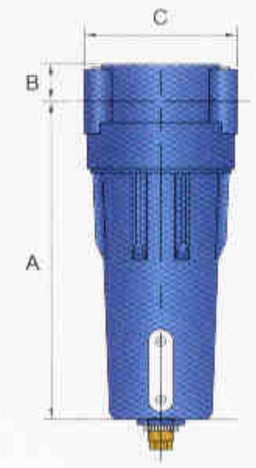

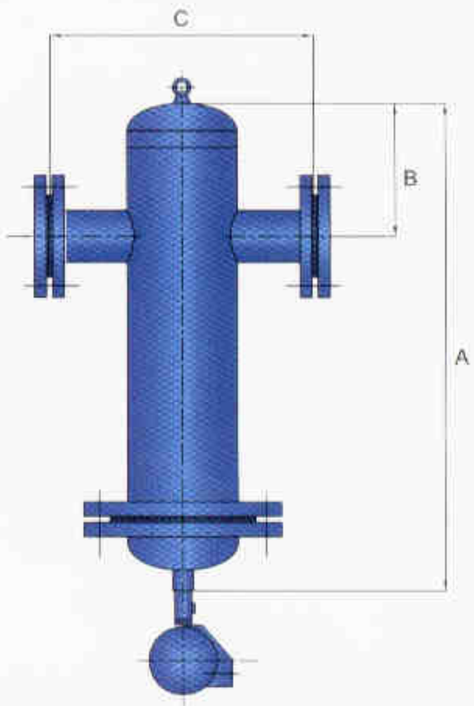

TECHNICAL STANDARD

- Maximum working pressure: 1.0 MPa (flange type); 1.6 MPa (screw type)
- Maximum working temperature: 66°C
- Minimum working temperature: 1.5°C
- Pressure differences: 0.007 MPa

SPECIFICATION PARAMETERS

Model	Nominal Volume	Inlet Tube Diameter (mm)	Dimensions (mm)			Weight (+Kg)
			A	B	C	
MWS0020	1.7	G ½”	217	26	104	1.2
MWS0040	3.5	G 1”	287	26	104	1.5
MWS0070	7.1	G 1.1/2”	385	39	138	3.0
MWS0110	10.6	G 1.1/2”	585	39	138	3.6
MWS0140	13.8	G 2”	639	46	148	9.5
MWS0180	17.5	G 2”	779	46	148	11.8
MWS0220	22.1	G 2.1/2”	800	50	150	12.0
MWS0260	26.0	G 2.1/2”	1000	50	150	13.6
MWS0700F	42.0	DN65	713	195	380	30
MWS0800F	50.0	DN80	713	195	380	31
MWS1000F	60.0	DN100	913	230	449	92
MWS1300F	80.0	DN125	1141	263	493	145
MWS1800F	120.0	DN150	1210	301	545	160
MWS3000F	180.0	DN200	1423	361	750	348
MWS4800F	288.0	DN250	1250	410	740	510
MWS7200F	432.0	DN300	1269	485	1000	662

Pressure (Mpa:g)	0.1	0.3	0.5	0.7	0.9	1.1	1.3	1.5	1.6	2.0
Correction factor	0.38	0.65	0.85	1.00	1.13	1.25	1.36	1.46	1.51	1.62

Distributor